Order this document
by MPX4250/D

MPX4250 SERIES

INTEGRATED PRESSURE SENSOR
20 to 250 kPa (2.9 to 36.3 psi)
0.2 to 4.9 V OUTPUT

Integrated Silicon Pressure Sensor Manifold Absolute Pressure Sensor On-Chip Signal Conditioned, Temperature Compensated and Calibrated

The Motorola MPX4250 series Manifold Absolute Pressure (MAP) sensor for turbo boost engine control is designed to sense absolute air pressure within the intake manifold. This measurement can be used to compute the amount of fuel required for each cylinder.

The MPX4250 series sensor integrates on–chip, bipolar op amp circuitry and thin film resistor networks to provide a high level analog output signal and temperature compensation. The small form factor and reliability of on–chip integration make the Motorola MAP sensor a logical and economical choice for automotive system designers.

Features

- 1.5% Maximum Error Over 0° to 85°C
- Specifically Designed for Intake Manifold Absolute Pressure Sensing in Engine Control Systems
- Ideally Suited for Direct Microprocessor Interfacing
- Patented Silicon Shear Stress Strain Gauge
- Temperature Compensated Over –40° to +125°C
- Offers Reduction in Weight and Volume Compared to Existing Hybrid Modules
- Durable Epoxy Unibody Element
- Ideal for Non–Automotive Applications

Application Examples

- Manifold Sensing for Automotive Systems

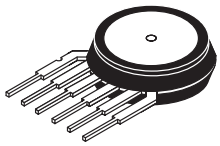

BASIC CHIP CARRIER ELEMENT
CASE 867–08, STYLE 1

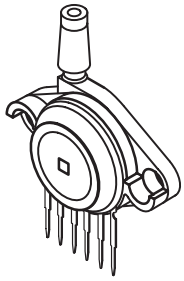

PORT OPTION
CASE 867B–04, STYLE 1

PIN NUMBER			
1	V_{out}	4	N/C
2	Gnd	5	N/C
3	V_S	6	N/C

NOTE: Pins 4, 5, and 6 are internal device connections. Do not connect to external circuitry or ground. Pin 1 is noted by the notch in the Lead.

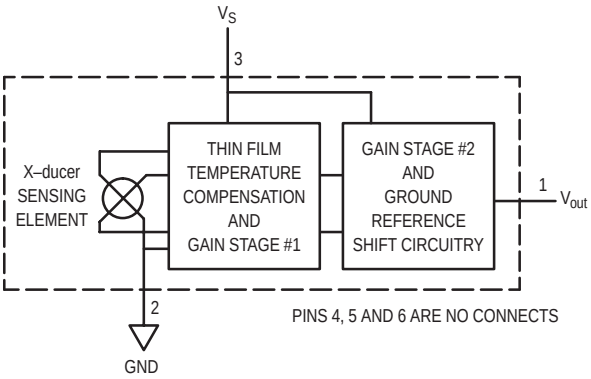

Figure 1. Fully Integrated Pressure Sensor Schematic

Senseon and X–ducer are trademarks of Motorola, Inc.

REV 3

© Motorola, Inc. 1998

MAXIMUM RATINGS(1)

Parametrics	Symbol	Value	Unit
Overpressure(2) (P1 > P2)	P_{max}	400	kPa
Burst Pressure(2) (P1 > P2)	P_{burst}	1000	kPa
Storage Temperature	T_{stg}	–40 to +125	°C
Operating Temperature	T_A	–40 to +125	°C

1. T_C = 25°C unless otherwise noted.
2. Exposure beyond the specified limits may cause permanent damage or degradation to the device.

OPERATING CHARACTERISTICS (V_S = 5.1 Vdc, T_A = 25°C unless otherwise noted, P1 > P2)

Characteristic		Symbol	Min	Typ	Max	Unit
Pressure Range(1)		P_{OP}	20	—	250	kPa
Supply Voltage(2)		V_S	4.85	5.1	5.35	Vdc
Supply Current		I_o	—	7.0	10	mAdc
Minimum Pressure Offset(3) @ V_S = 5.1 Volts	(0 to 85°C)	V_{FSS}	4.622	4.692	4.762	Vdc
Full Scale Output(4) @ V_S = 5.1 Volts	(0 to 85°C)	V_{FSS}	4.622	4.692	4.762	Vdc
Full Scale Span(5) @ V_S = 5.1 Volts	(0 to 85°C)	V_{FSS}	4.622	4.692	4.762	Vdc
Accuracy(6)	(0 to 85°C)	—	—	—	±1.5	$\%V_{FSS}$
Sensitivity		ΔV/ΔP	—	20	—	mV/kPa
Response Time(7)		t_R	—	1.0	—	ms
Output Source Current at Full Scale Output		I_o+	—	0.1	—	mAdc
Warm–Up Time(8)		—	—	20	—	ms
Offset Stability(9)		—	—	±0.5	—	$\%V_{FSS}$

Decoupling circuit shown in Figure 3 required to meet electrical specifications.

MECHANICAL CHARACTERISTICS

Characteristics	Symbol	Min	Typ	Max	Unit
Weight, Basic Element (Case 867)	—	—	4.0	—	Grams
Common Mode Line Pressure(10)	—	—	—	690	kPa

NOTES:
1. 1.0 kPa (kiloPascal) equals 0.145 psi.
2. Device is ratiometric within this specified excitation range.
3. Offset (V_{off}) is defined as the output voltage at the minimum rated pressure.
4. Full Scale Output (V_{FSO}) is defined as the output voltage at the maximum or full rated pressure.
5. Full Scale Span (V_{FSS}) is defined as the algebraic difference between the output voltage at full rated pressure and the output voltage at the minimum rated pressure.
6. Accuracy (error budget) consists of the following:
   - Linearity: Output deviation from a straight line relationship with pressure over the specified pressure range.
   - Temperature Hysteresis: Output deviation at any temperature within the operating temperature range, after the temperature is cycled to and from the minimum or maximum operating temperature points, with zero differential pressure applied.
   - Pressure Hysteresis: Output deviation at any pressure within the specified range, when this pressure is cycled to and from the minimum or maximum rated pressure, at 25°C.
   - TcSpan: Output deviation over the temperature range of 0° to 85°C, relative to 25°C.
   - TcOffset: Output deviation with minimum rated pressure applied, over the temperature range of 0° to 85°C, relative to 25°C.
   - Variation from Nominal: The variation from nominal values, for Offset or Full Scale Span, as a percent of V_{FSS}, at 25°C.
7. Response Time is defined as the time for the incremental change in the output to go from 10% to 90% of its final value when subjected to a specified step change in pressure.
8. Warm–up is defined as the time required for the product to meet the specified output voltage after the Pressure has been stabilized.
9. Offset stability is the product's output deviation when subjected to 1000 hours of Pulsed Pressure, Temperature Cycling with Bias Test.
10. Common mode pressures beyond what is specified may result in leakage at the case–to–lead interface.

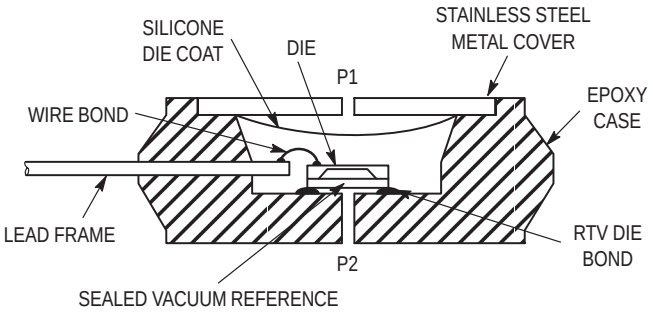

Figure 2. Cross–Sectional Diagram (Not to Scale)

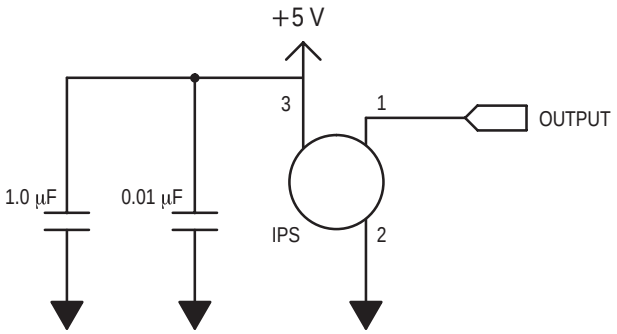

Figure 3. Recommended Power Supply Decoupling. For output filtering recommendations, please refer to Application Note AN1646.

Figure 2 illustrates the absolute sensing chip in the basic chip carrier (Case 867). A fluorosilicone gel isolates the die surface and wire bonds from the environment, while allowing the pressure signal to be transmitted to the sensor diaphragm. The MPX4250A series pressure sensor operating characteristics, and internal reliability and qualification tests are based on use of dry air as the pressure media. Media, other than dry air, may have adverse effects on sensor performance and long–term reliability. Contact the factory for information regarding media compatibility in your application.

Figure 4 shows the sensor output signal relative to pressure input. Typical, minimum, and maximum output curves are shown for operation over temperature range of 0° to 85°C. (The output will saturate outside of the specified pressure range.)

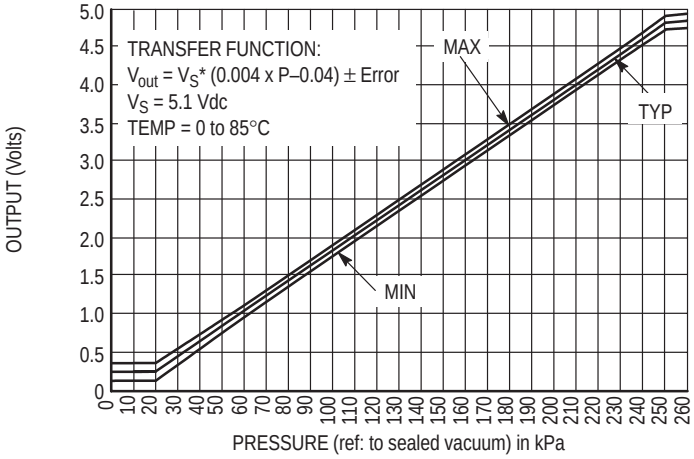

Figure 4. Output versus Absolute Pressure

Transfer Function

Nominal Transfer Value: $V_{out} = V_S$ (P x 0.004 – 0.04)
+/– (Pressure Error x Temp. Factor x 0.004 x V_S)
V_S = 5.1 V ± 0.25 Vdc

Temperature Error Band

MPX4250A Series

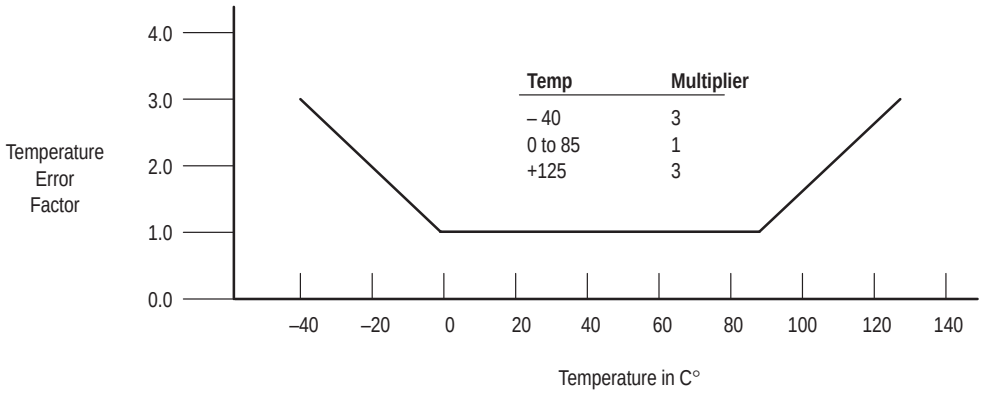

NOTE: The Temperature Multiplier is a linear response from 0° to –40°C and from 85° to 125°C.

Pressure Error Band

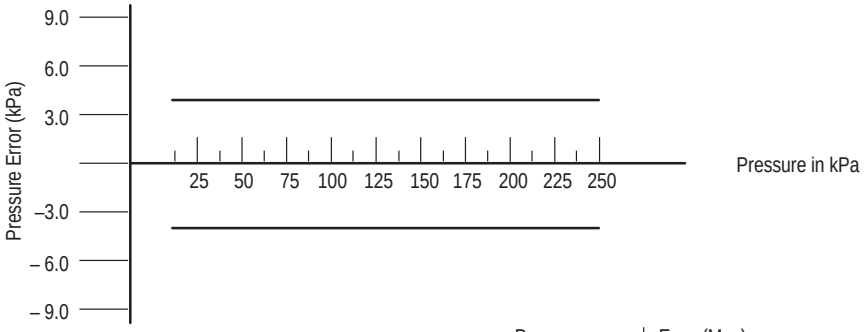

Pressure	Error (Max)
20 to 250 kPa	± 3.45 (kPa)

ORDERING INFORMATION

The MPX4250A series Turbo MAP silicon pressure sensors are available in the basic element package or with pressure port fittings that provide mounting ease and barbed hose connections.

Device Type	Options	Case No.	MPX Series Order No.	Marking
Basic Element	Absolute, Element	Case 867–08	MPX4250A	MPX4250A
Ported Elements	Absolute, Ported	Case 867B–04	MPX4250AP	MPX4250AP
	Absolute, Stove Pipe Port	Case 867E–03	MPX4250AS	MPX4250A
	Absolute, Axial Port	Case 867F–03	MPX4250ASX	MPX4250A

PACKAGE DIMENSIONS

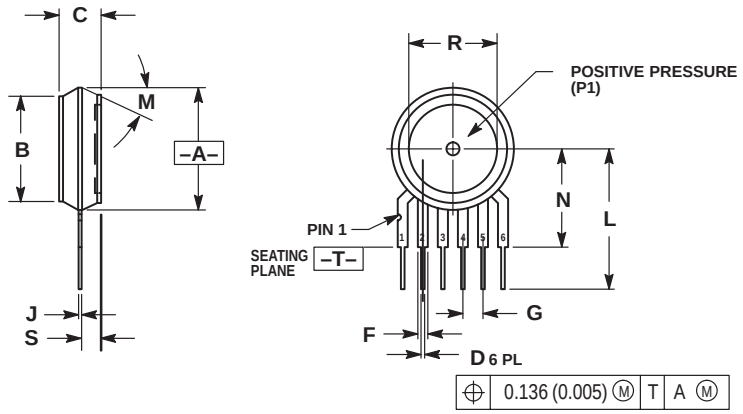

NOTES:
1. DIMENSIONING AND TOLERANCING PER ANSI Y14.5M, 1982.
2. CONTROLLING DIMENSION: INCH.
3. DIMENSION –A– IS INCLUSIVE OF THE MOLD STOP RING. MOLD STOP RING NOT TO EXCEED 16.00 (0.630).

	INCHES		MILLIMETERS	
DIM	MIN	MAX	MIN	MAX
A	0.595	0.630	15.11	16.00
B	0.514	0.534	13.06	13.56
C	0.200	0.220	5.08	5.59
D	0.027	0.033	0.68	0.84
F	0.048	0.064	1.22	1.63
G	0.100 BSC		2.54 BSC	
J	0.014	0.016	0.36	0.40
L	0.695	0.725	17.65	18.42
M	30 ° NOM		30 ° NOM	
N	0.475	0.495	12.07	12.57
R	0.430	0.450	10.92	11.43
S	0.090	0.105	2.29	2.66

STYLE 1:
PIN 1. VOUT
2. GROUND
3. VCC
4. V1
5. V2
6. VEX

CASE 867–08
ISSUE N

BASIC ELEMENT (D)

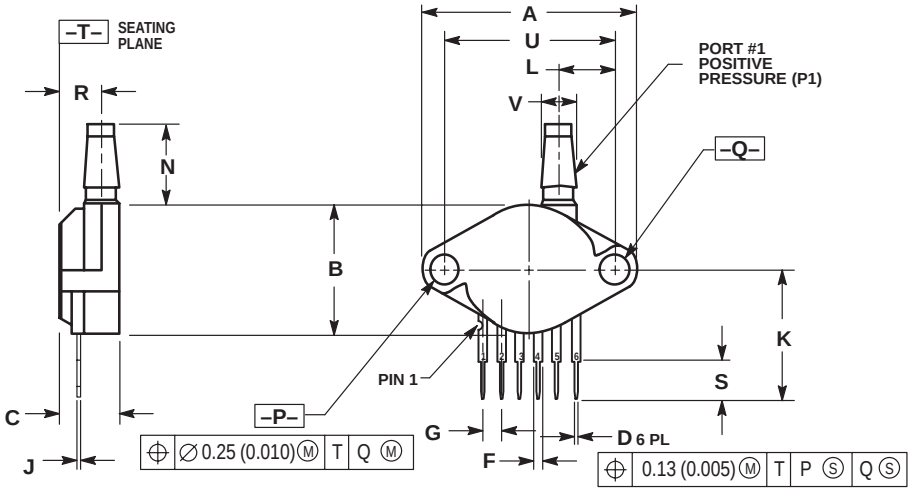

NOTES:
1. DIMENSIONING AND TOLERANCING PER ANSI Y14.5M, 1982.
2. CONTROLLING DIMENSION: INCH.

	INCHES		MILLIMETERS	
DIM	MIN	MAX	MIN	MAX
A	1.145	1.175	29.08	29.85
B	0.685	0.715	17.40	18.16
C	0.305	0.325	7.75	8.26
D	0.027	0.033	0.68	0.84
F	0.048	0.064	1.22	1.63
G	0.100 BSC		2.54 BSC	
J	0.014	0.016	0.36	0.41
K	0.695	0.725	17.65	18.42
L	0.290	0.300	7.37	7.62
N	0.420	0.440	10.67	11.18
P	0.153	0.159	3.89	4.04
Q	0.153	0.159	3.89	4.04
R	0.230	0.250	5.84	6.35
S	0.220	0.240	5.59	6.10
U	0.910 BSC		23.11 BSC	
V	0.182	0.194	4.62	4.93

STYLE 1:
PIN 1. V_{OUT}
2. GROUND
3. V_{CC}
4. V1
5. V2
6. V_{EX}

CASE 867B–04
ISSUE E

PRESSURE SIDE PORTED (AP)

PACKAGE DIMENSIONS – continued

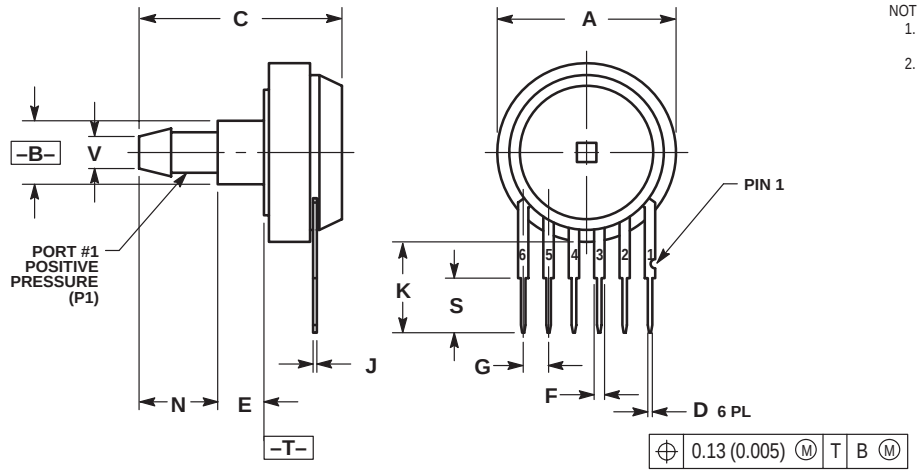

NOTES:
1. DIMENSIONING AND TOLERANCING PER ANSI Y14.5M, 1982.
2. CONTROLLING DIMENSION: INCH.

DIM	INCHES MIN	INCHES MAX	MILLIMETERS MIN	MILLIMETERS MAX
A	0.690	0.720	17.53	18.28
B	0.245	0.255	6.22	6.48
C	0.780	0.820	19.81	20.82
D	0.027	0.033	0.69	0.84
E	0.178	0.186	4.52	4.72
F	0.048	0.064	1.22	1.63
G	0.100 BSC		2.54 BSC	
J	0.014	0.016	0.36	0.41
K	0.345	0.375	8.76	9.53
N	0.300	0.310	7.62	7.87
S	0.220	0.240	5.59	6.10
V	0.182	0.194	4.62	4.93

STYLE 1:
PIN 1. V_{OUT}
2. GROUND
3. V_{CC}
4. V1
5. V2
6. V_{EX}

CASE 867E–03
ISSUE D

PRESSURE SIDE PORTED (AS)

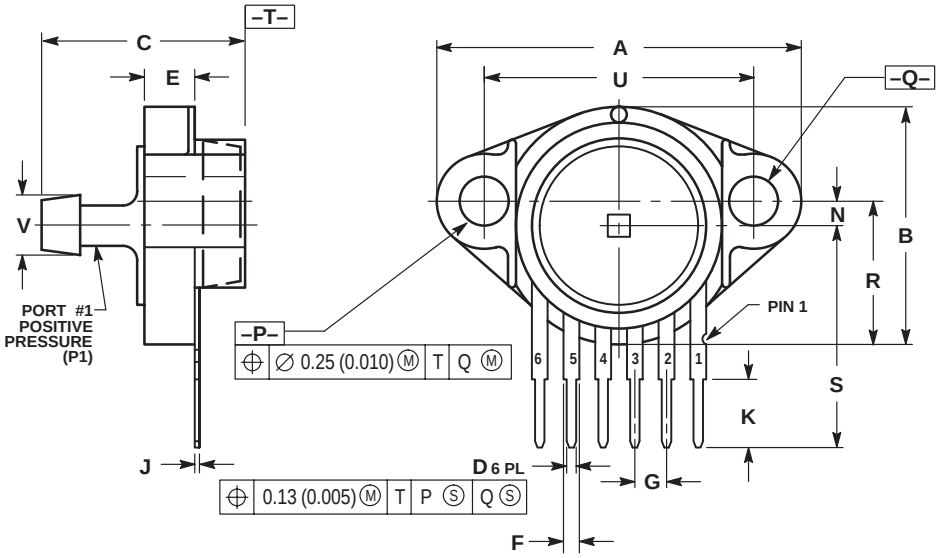

NOTES:
1. DIMENSIONING AND TOLERANCING PER ANSI Y14.5M, 1982.
2. CONTROLLING DIMENSION: INCH.

DIM	INCHES MIN	INCHES MAX	MILLIMETERS MIN	MILLIMETERS MAX
A	1.080	1.120	27.43	28.45
B	0.740	0.760	18.80	19.30
C	0.630	0.650	16.00	16.51
D	0.027	0.033	0.68	0.84
E	0.160	0.180	4.06	4.57
F	0.048	0.064	1.22	1.63
G	0.100 BSC		2.54 BSC	
J	0.014	0.016	0.36	0.41
K	0.220	0.240	5.59	6.10
N	0.070	0.080	1.78	2.03
P	0.150	0.160	3.81	4.06
Q	0.150	0.160	3.81	4.06
R	0.440	0.460	11.18	11.68
S	0.695	0.725	17.65	18.42
U	0.840	0.860	21.34	21.84
V	0.182	0.194	4.62	4.93

STYLE 1:
PIN 1. V_{OUT}
2. GROUND
3. V_{CC}
4. V1
5. V2
6. V_{EX}

CASE 867F–03
ISSUE D

PRESSURE SIDE PORTED (ASX)

Motorola reserves the right to make changes without further notice to any products herein. Motorola makes no warranty, representation or guarantee regarding the suitability of its products for any particular purpose, nor does Motorola assume any liability arising out of the application or use of any product or circuit, and specifically disclaims any and all liability, including without limitation consequential or incidental damages. "Typical" parameters which may be provided in Motorola data sheets and/or specifications can and do vary in different applications and actual performance may vary over time. All operating parameters, including "Typicals" must be validated for each customer application by customer's technical experts. Motorola does not convey any license under its patent rights nor the rights of others. Motorola products are not designed, intended, or authorized for use as components in systems intended for surgical implant into the body, or other applications intended to support or sustain life, or for any other application in which the failure of the Motorola product could create a situation where personal injury or death may occur. Should Buyer purchase or use Motorola products for any such unintended or unauthorized application, Buyer shall indemnify and hold Motorola and its officers, employees, subsidiaries, affiliates, and distributors harmless against all claims, costs, damages, and expenses, and reasonable attorney fees arising out of, directly or indirectly, any claim of personal injury or death associated with such unintended or unauthorized use, even if such claim alleges that Motorola was negligent regarding the design or manufacture of the part. Motorola and Ⓜ are registered trademarks of Motorola, Inc. Motorola, Inc. is an Equal Opportunity/Affirmative Action Employer.

Mfax is a trademark of Motorola, Inc.

How to reach us:
USA / EUROPE / Locations Not Listed: Motorola Literature Distribution;
P.O. Box 5405, Denver, Colorado 80217. 1–303–675–2140 or 1–800–441–2447

JAPAN: Nippon Motorola Ltd.: SPD, Strategic Planning Office, 141,
4–32–1 Nishi–Gotanda, Shagawa–ku, Tokyo, Japan. 03–5487–8488

Customer Focus Center: 1–800–521–6274

Mfax™: RMFAX0@email.sps.mot.com – TOUCHTONE 1–602–244–6609
Motorola Fax Back System – US & Canada ONLY 1–800–774–1848
– http://sps.motorola.com/mfax/

ASIA / PACIFIC: Motorola Semiconductors H.K. Ltd.; 8B Tai Ping Industrial Park,
51 Ting Kok Road, Tai Po, N.T., Hong Kong. 852–26629298

HOME PAGE: http://motorola.com/sps/