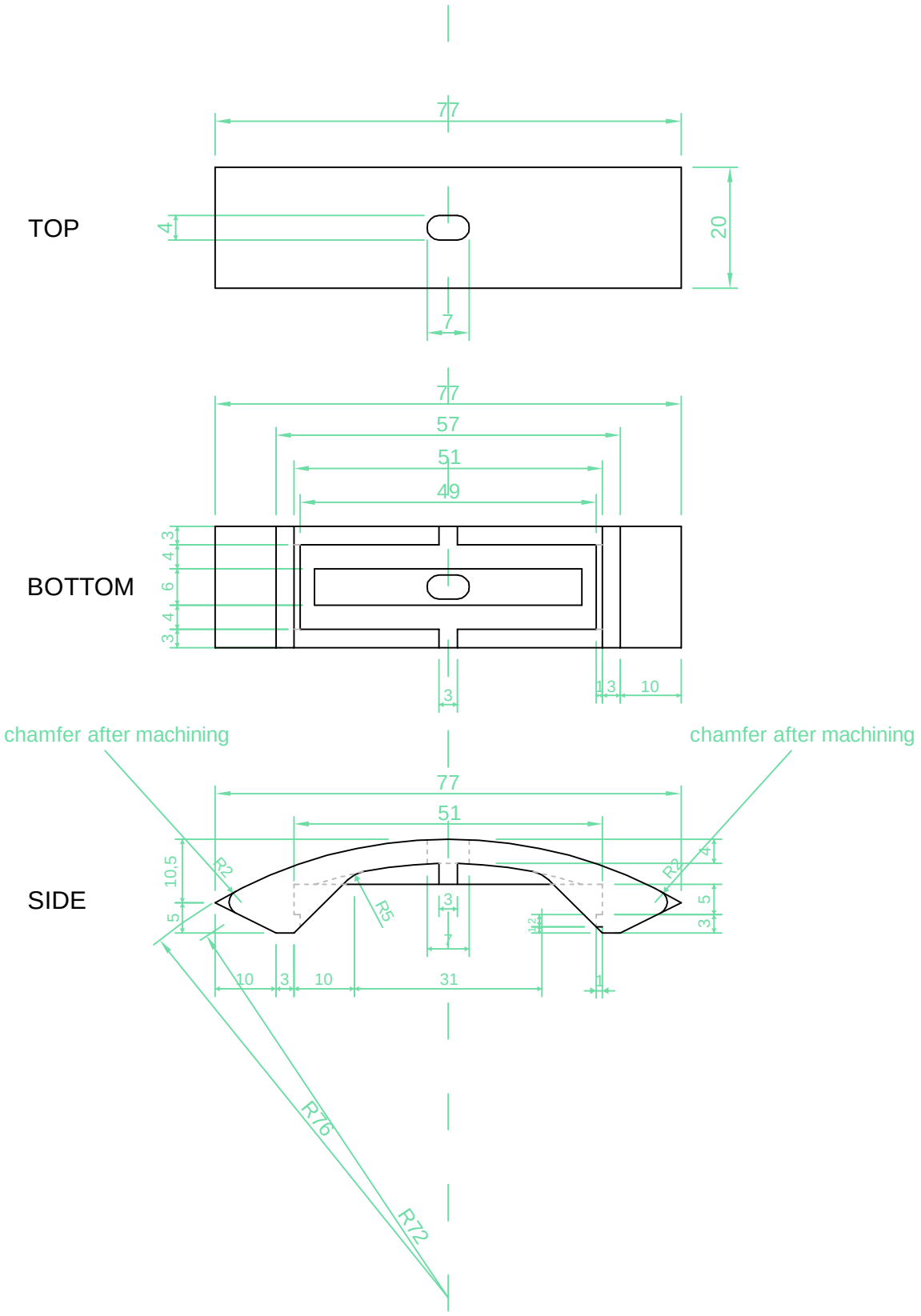

All dimensions in mm
Material: Duratron CU60